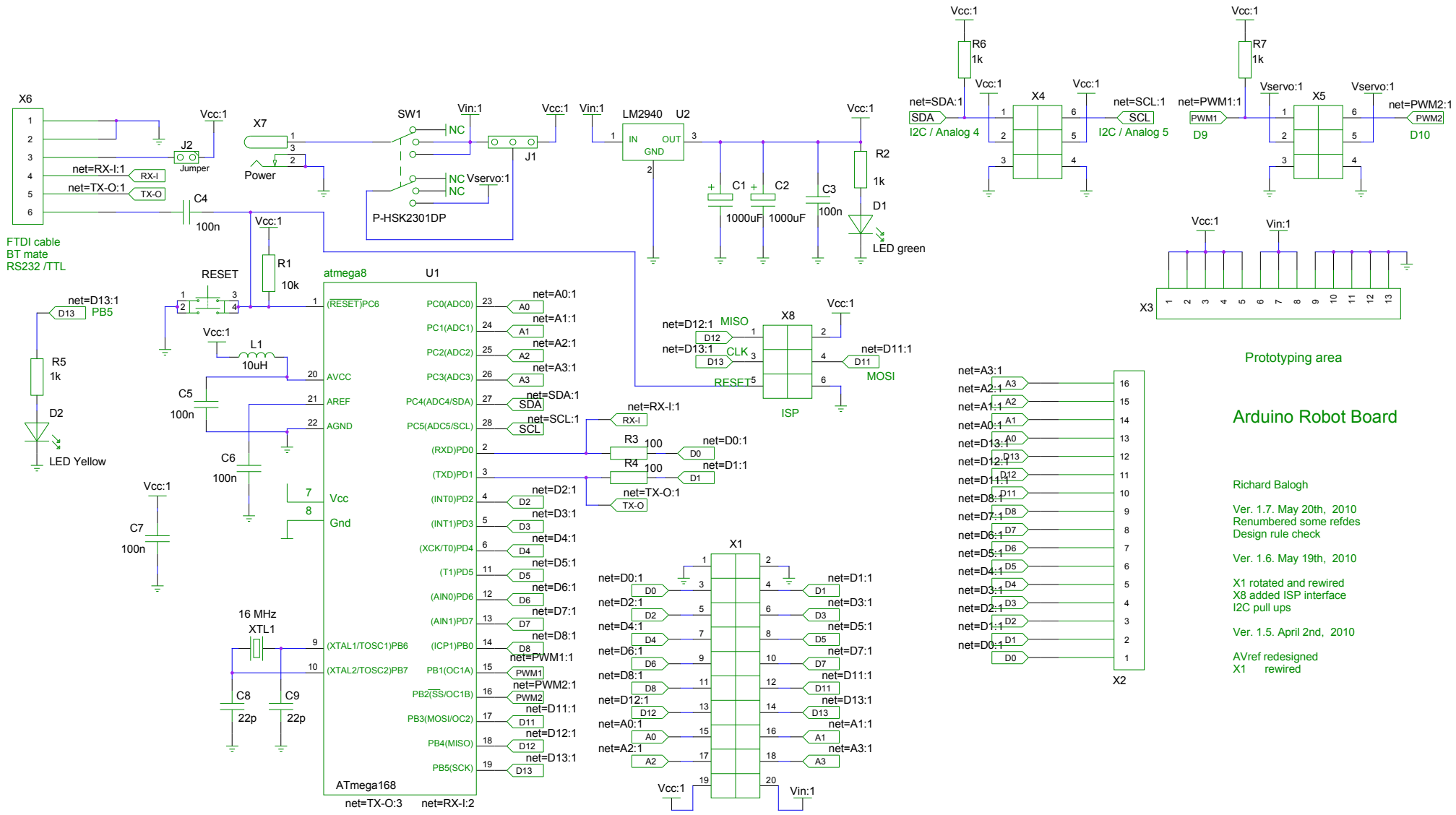
X6
FTDI cable
BT mate
RS232 /TTL
net=RX-I:1
net=TX-O:1
RX-I
TX-O
J2
Jumper
Vcc:1
C4
100n
X7
Power
SW1
P-HSK2301DP
NC
Vservo:1
Vin:1
J1
LM2940
U2
IN
OUT
GND
C1
C2
C3
1000uF
100n
R2
1k
D1
LED green
R6
R7
net=SDA:1
net=SCL:1
SDA
SCL
I2C / Analog 4
I2C / Analog 5
X4
X5
net=PWM1:1
net=PWM2:1
PWM1
PWM2
D9
D10
X3
Prototyping area
Arduino Robot Board
Richard Balogh
Ver. 1.7. May 20th, 2010
Renumbered some refdes
Design rule check
Ver. 1.6. May 19th, 2010
X1 rotated and rewired
X8 added ISP interface
I2C pull ups
Ver. 1.5. April 2nd, 2010
AVref redesigned
X1 rewired
RESET
R1
10k
atmega8
U1
(RESET)PC6
AVCC
AREF
AGND
Vcc
Gnd
PC0(ADC0)
PC1(ADC1)
PC2(ADC2)
PC3(ADC3)
PC4(ADC4/SDA)
PC5(ADC5/SCL)
(RXD)PD0
(TXD)PD1
(INT0)PD2
(INT1)PD3
(XCK/T0)PD4
(T1)PD5
(AIN0)PD6
(AIN1)PD7
(ICP1)PB0
PB1(OC1A)
PB2(SS/OC1B)
PB3(MOSI/OC2)
PB4(MISO)
PB5(SCK)
(XTAL1/TOSC1)PB6
(XTAL2/TOSC2)PB7
ATmega168
net=TX-O:3
net=RX-I:2
net=D13:1
PB5
D13
R5
1k
D2
LED Yellow
L1
10uH
C5
100n
C6
100n
C7
100n
16 MHz
XTL1
C8
C9
22p
22p
net=A0:1
net=A1:1
net=A2:1
net=A3:1
net=SDA:1
net=SCL:1
net=RX-I:1
net=TX-O:1
R3
R4
100
net=D0:1
net=D1:1
net=D2:1
net=D3:1
net=D4:1
net=D5:1
net=D6:1
net=D7:1
net=D8:1
net=PWM1:1
net=PWM2:1
net=D11:1
net=D12:1
net=D13:1
X8
MISO
CLK
RESET
MOSI
ISP
X1
X2
net=A3:1
net=A2:1
net=A1:1
net=A0:1
net=D13:1
net=D12:1
net=D11:1
net=D8:1
net=D7:1
net=D6:1
net=D5:1
net=D4:1
net=D3:1
net=D2:1
net=D1:1
net=D0:1