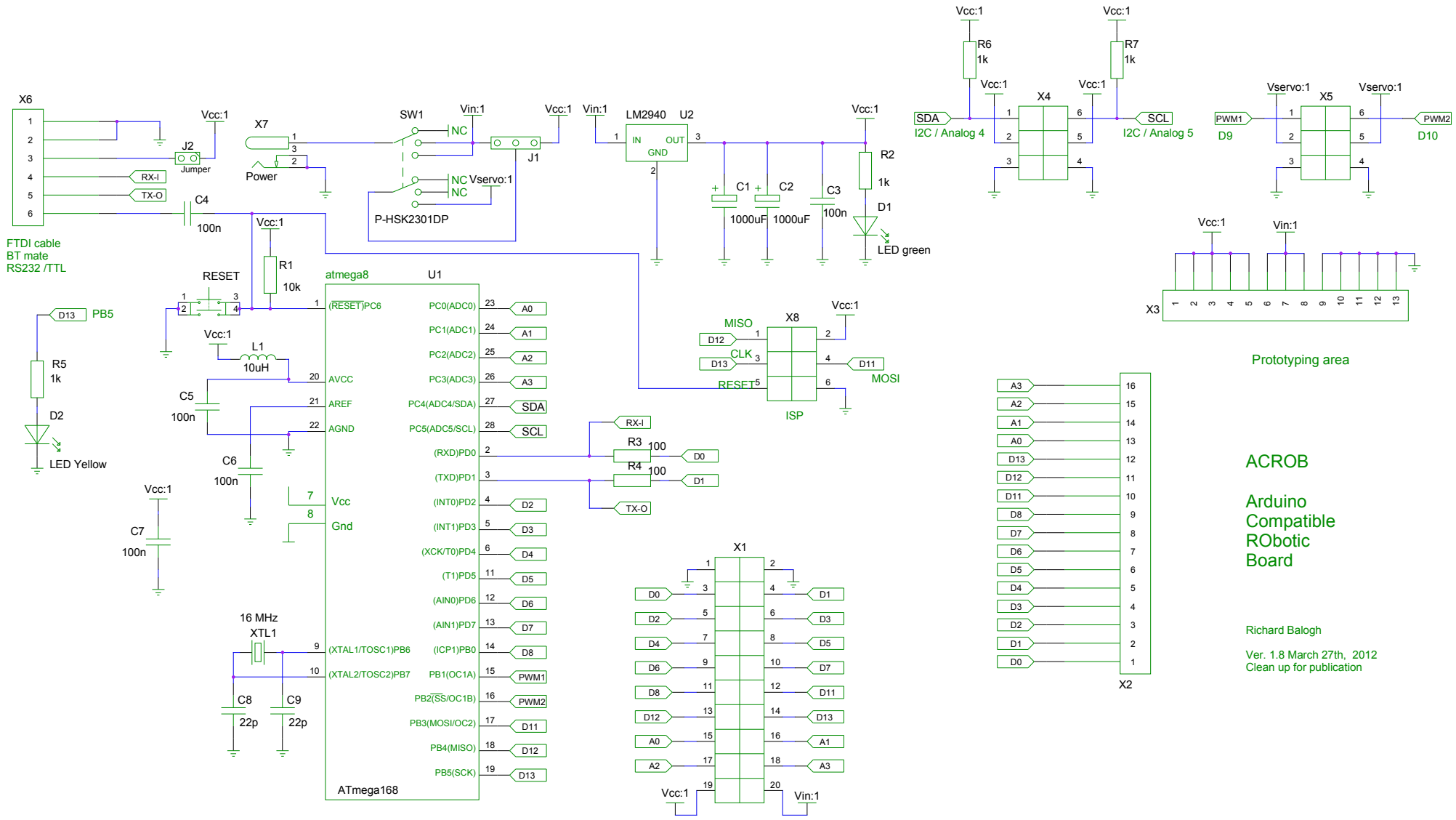
X6
FTDI cable
BT mate
RS232 /TTL
RX-I
TX-O
C4
100n
Vcc:1
J2
Jumper
X7
Power
SW1
NC
Vservo:1
P-HSK2301DP
Vin:1
J1
LM2940
U2
IN
OUT
GND
C1
1000uF
C2
1000uF
C3
100n
R2
1k
D1
LED green
R6
1k
R7
1k
X4
SDA
I2C / Analog 4
SCL
I2C / Analog 5
X5
PWM1
D9
PWM2
D10
X3
Prototyping area
R1
10k
RESET
atmega8
U1
(RESET)PC6
PC0(ADC0)
PC1(ADC1)
PC2(ADC2)
PC3(ADC3)
PC4(ADC4/SDA)
PC5(ADC5/SCL)
(RXD)PD0
(TXD)PD1
(INT0)PD2
(INT1)PD3
(XCK/T0)PD4
(T1)PD5
(AIN0)PD6
(AIN1)PD7
(ICP1)PB0
PB1(OC1A)
PB2(SS/OC1B)
PB3(MOSI/OC2)
PB4(MISO)
PB5(SCK)
AVCC
AREF
AGND
Vcc
Gnd
(XTAL1/TOSC1)PB6
(XTAL2/TOSC2)PB7
ATmega168
D13
PB5
R5
1k
D2
LED Yellow
L1
10uH
C5
100n
C6
100n
C7
100n
16 MHz
XTL1
C8
22p
C9
22p
X8
MISO
CLK
MOSI
ISP
R3
100
R4
100
X1
X2
ACROB
Arduino
Compatible
RObotic
Board
Richard Balogh
Ver. 1.8 March 27th, 2012
Clean up for publication